(Underline last name.)

MEEG 2003

Final Exam (A)

Name: _____

ID#: _____

1. The magnitude of the reaction moment $\vec{M}_F$ from the fixed support F of the frame is

(a) 23 kN·m. (b) 22 kN·m. (c) 21 kN·m. (d) 20 kN·m. (e) 19 kN·m.

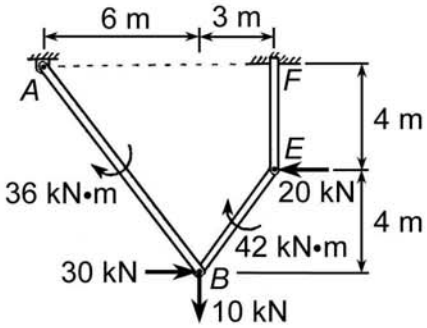

Fig. P1 & P2

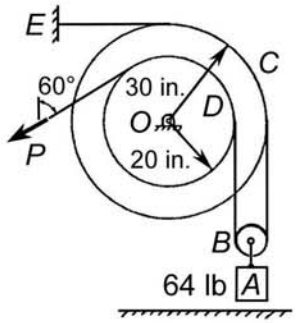

Fig. P3 & P4

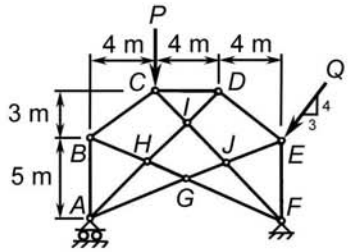

Fig. P5

2. The magnitude of the horizontal component $\vec{A}_x$ of the reaction from the hinged support A of the frame is

(a) 16 kN. (b) 15.75 kN. (c) 15.5 kN. (d) 15.25 kN. (e) 15 kN.

3. The drums C and D are rigidly fastened together. The value of μ_s between the belt and either drum is 0.15. The minimum magnitude of the applied force $\vec{P}$ required to raise (pull up) the block A as shown is

(a) 50.0 lb. (b) 47.3 lb. (c) 44.7 lb. (d) 42.1 lb. (e) 39.4 lb.

4. The drums C and D are rigidly fastened together. The value of μ_s between the belt and either drum is 0.15. The minimum magnitude of the applied force $\vec{P}$ required to hold the system in equilibrium as shown is

(a) 29.2 lb. (b) 27.8 lb. (c) 26.3 lb. (d) 24.8 lb. (e) 23.4 lb.

5. If P = 15 kN and Q = 23 kN, then F_{IJ} is

(a) 3.39 kN. (b) 3.76 kN. (c) 4.12 kN. (d) 4.49 kN. (e) 4.85 kN.

MEEG 2003 Final Exam (A)

6. A composite section is shown, where C_1, C_2, and C are the centroids of the rectangle, the wide-flange section, and the composite section, respectively. The area of the wide-flange section is $A_2 = 9.12\ in^2$. The distance a as indicated is
(a) 4.79 in. (b) 4.48 in. (c) 4.14 in.
(d) 3.77 in. (e) 3.12 in.

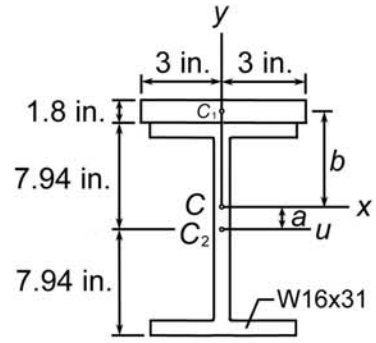

Fig. P6 & P7

7. The wide-flange section in the composite section has an area $A_2 = 9.12\ in^2$ and a moment of inertia $(\bar{I}_y)_2 = 12.4\ in^4$. The radius of gyration $\bar{k}_y$ of the composite section shown is
(a) 1.443 in. (b) 1.465 in. (c) 1.484 in.
(d) 1.500 in. (e) 1.514 in.

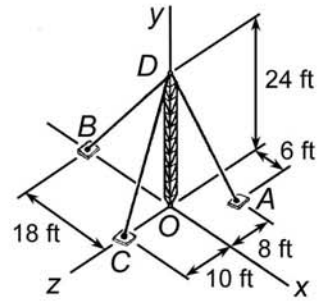

Fig. P8

8. The resultant force exerted by the three cables on the transmission tower at D is $\vec{R} = -1280\vec{j}$ lb. The tension in the cable DC is
(a) 250 lb. (b) 385 lb. (c) 520 lb.
(d) 585 lb. (e) 650 lb.

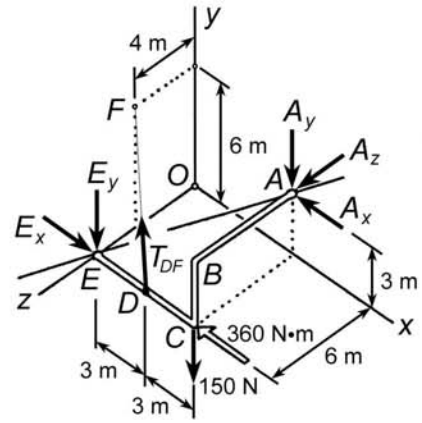

Fig. P9

9. The resultant moment M_{AE}^{R} of the force system about the axis AE is zero. The magnitude of the force $\vec{T}_{DF}$ is
(a) 273 N. (b) 266 N. (c) 259 N. (d) 252 N. (e) 245 N.

10. The magnitude of the reaction from the support at A of the frame shown is
(a) 17.1 kN. (b) 16.2 kN. (c) 15.3 kN.
(d) 14.4 kN. (e) 13.5 kN.

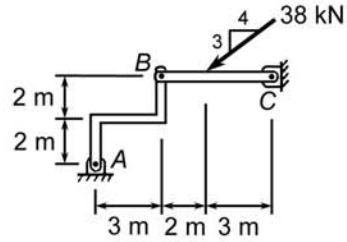

Fig. P10