13.31

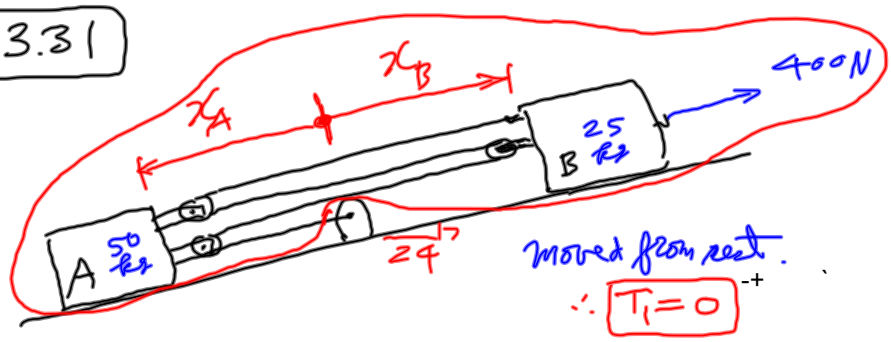

$\mu_k = 0.25$

$\vec{q}_A = 1.5\,m \nearrow$

$v_B = ?$

moved from rest.

$\therefore \boxed{T_1 = 0}$

$\boxed{4x_A + 3x_B = k}$ $\quad 4v_A + 3v_B = 0$ $\quad \boxed{v_A = -\frac{3}{4}v_B}$

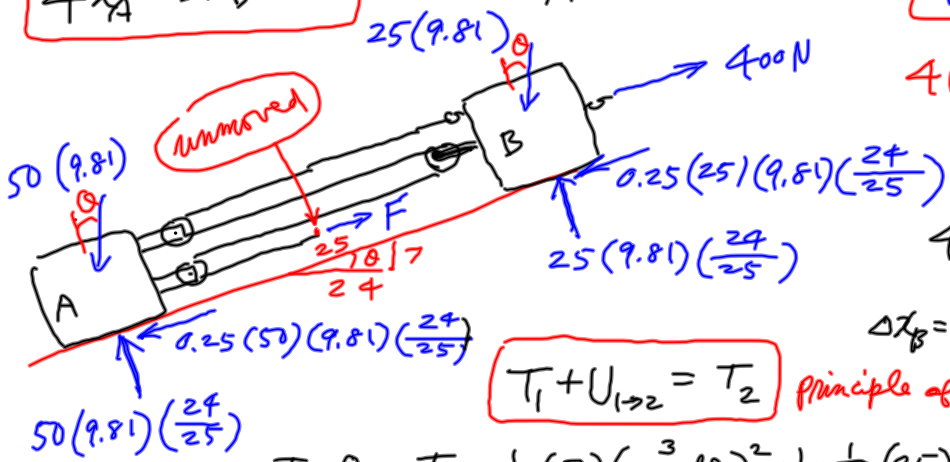

$4(\Delta x_A) + 3(\Delta x_B) = 0$

$\Delta x_A = -1.5$

$4(\overset{-0.5}{\cancel{-1.5}}) + \overset{1}{\cancel{3}}(\Delta x_B) = 0$

$\Delta x_B = +2,$ $\quad \boxed{\vec{q}_B = 2\,m \nearrow}$

$\boxed{T_1 + U_{1\to 2} = T_2}$ Principle of work & kinetic energy

$T_1 = 0, \quad T_2 = \frac{1}{2}(50)\left(-\frac{3}{4}v_B\right)^2 + \frac{1}{2}(25)v_B^2$

$$U_{1\to 2} = 50(9.81)(-1.5)\left(\frac{7}{25}\right) + \left[0.25(50)(9.81)\left(\frac{24}{25}\right)\right](-1.5) + 0$$
$$+ 25(9.81)(-2)\left(\frac{7}{25}\right) + \left[0.25(25)(9.81)\left(\frac{24}{25}\right)\right](-2)$$
$$+ 400(2) + 0$$

Work of a force on a body is equal to the force on the body times the displacement of the body in the direction of the force.

$\therefore v_B = \square$ $\quad \boxed{v_B = \square\ m/s}$